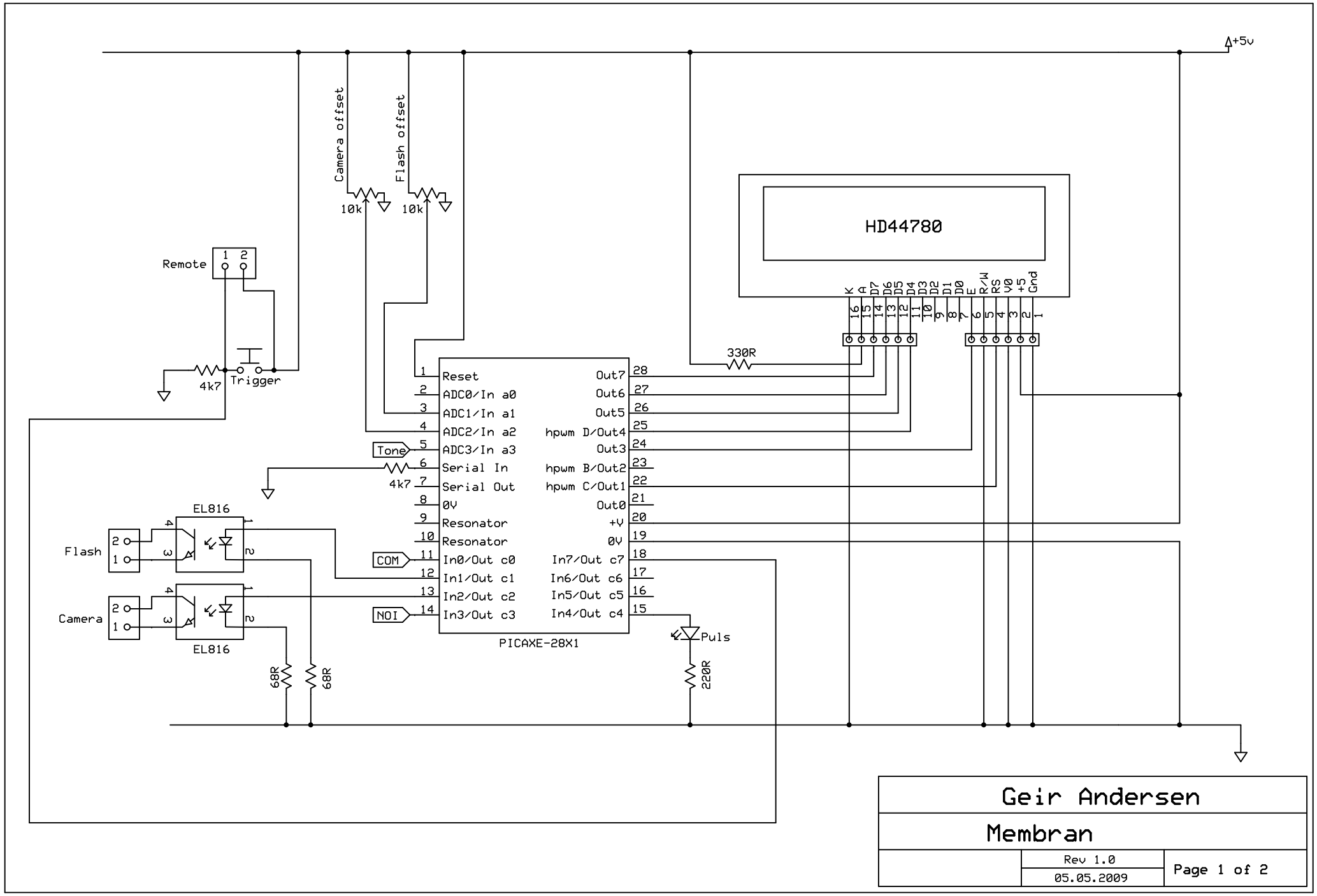


| | | |
|---|---|---|
| Geir Andersen | | |
| Membran | | |
| | Rev 1.0<br>05.05.2009 | Page 1 of 2 |